HIMax®

Manual

SAFETY
NONSTOP

HIMA

X-CPU 01

Company: Joyoung International Trading Co.,Limited
Attn： Smiling
Mobile/WhatsApp/Wechat:+86 18050035902
Email: info@htechplc.com
Website: https://www.joyoungintl.com/

8

All HIMA products mentioned in this manual are protected by the HIMA trade-mark. Unless noted otherwise, this also applies to other manufacturers and their respective products referred to herein.

All of the instructions and technical specifications in this manual have been written with great care and effective quality assurance measures have been implemented to ensure their validity. For questions, please contact HIMA directly. HIMA appreciates any suggestion on which information should be included in the manual.

Equipment subject to change without notice. HIMA also reserves the right to modify the written material without prior notice.

For further information, refer to the CD-ROM and our website http://www.hima.de and http://www.hima.com.

© Copyright 2011, HIMA Paul Hildebrandt GmbH + Co KG

All rights reserved

Contact

HIMA contact details:

HIMA Paul Hildebrandt GmbH + Co KG

P.O. Box 1261

68777 Brühl, Germany

Phone: +49 6202 709-0

Fax: +49 6202 709-107

E-mail: info@hima.com

Revision index	Revisions	Type of Change	
		technical	editorial
4.00	New edition for HIMax V4 and SILworX V4	X	X

Table of Contents

1 Introduction 5

1.1 Structure and Use of this Manual 5

1.2 Target Audience 5

1.3 Formatting Conventions 6

1.3.1 Safety Notes 6

1.3.2 Operating Tips 7

2 Safety 8

2.1 Intended Use 8

2.1.1 Environmental Requirements 8

2.1.2 ESD Protective Measures 8

2.2 Residual Risk 9

2.3 Safety Precautions 9

2.4 Emergency Information 9

3 Product Description 10

3.1 Safety Function of the Module 10

3.1.1 Reaction in the Event of a Fault 10

3.2 Scope of Delivery 11

3.3 Type Label 11

3.4 Structure 12

3.4.1 Block Diagram, Functional Units 12

3.4.2 Safety-Related Processor System 13

3.4.3 System Controller 13

3.4.4 Memory 13

3.4.5 Alarms and Events 13

3.4.6 Creating Events 14

3.4.7 Recording Events 15

3.4.8 Protocols and Interfaces 15

3.4.9 Ports in Use for Ethernet Communication 16

3.4.10 Mechanical Structure 16

3.4.11 Indicators 17

3.4.12 Module Status Indicators 18

3.4.13 Redundancy Indicators 19

3.4.14 System Bus Indicators 19

3.4.15 Maintenance Indicators 20

3.4.16 Fault Indicators 20

3.4.17 Ethernet Indicators 21

3.4.18 Mode Switch 21

3.4.19 Monitoring the Operating Voltage 23

3.4.20 Monitoring the Temperature 23

3.4.21 Operating System 24

3.5 Product Data 25
3.6 Connector Board 26
3.6.1 Connecting Options 26
4 Start-up 27
4.1 Mounting 27
4.1.1 Slots Permitted for the Processor Module 28
4.1.2 Mounting a Connector Board 28
4.1.3 Mounting and Removing the Module 31
4.1.4 Configuring the Module in SILWorX 32
4.1.5 Configuring Events in SILworX 37
4.1.6 User Program 40
4.1.7 Starting the Processor Module 40
5 Operation 42
5.1 Handling 42
5.2 Diagnosis 42
6 Maintenance 43
6.1 Maintenance Measures 43
6.1.1 Loading the Operating System 43
6.1.2 Proof Test 43
7 Decommissioning 44
8 Transport 45
9 Disposal 46
Appendix 47
Application Examples 47
Glossary 49
Index of Figures 50
Index of Tables 50
Index 51

1 Introduction

The present manual describes the technical characteristics of the module and its use. It provides information on how to install, start up and configure the module in SILworX.

1.1 Structure and Use of this Manual

The content of this manual is part of the hardware description of the HIMax programmable electronic system.

This manual is organized in the following main chapters:

- Introduction
- Safety
- Product Description
- Start-up
- Operation
- Maintenance
- Decommissioning
- Transport
- Disposal

Additionally, the following documents must be taken into account:

Name	Content	Document no.
HIMax System manual	Hardware description of the HIMax system	HI 801 001 E
HIMax Safety manual	Safety functions of the HIMax system	HI 801 003 E
HIMax Communication manual	Description of communication and protocols	HI 801 101 E
SILworX Online Help (OLH)	Instructions on how to use SILworX	-
First Steps	Introduction to SILworX	HI 801 103 E

Table 1: Additional Relevant Manuals

The latest manuals can be downloaded from the HIMA website at www.hima.com. The revision index on the footer can be used to compare the current version of existing manuals with the Internet edition.

1.2 Target Audience

This document addresses system planners, configuration engineers, programmers of automation devices and personnel authorized to implement, operate and maintain the devices and systems. Specialized knowledge of safety-related automation systems is required.

1.3 Formatting Conventions

To ensure improved readability and comprehensibility, the following fonts are used in this document:

Bold:	To highlight important parts Names of buttons, menu functions and tabs that can be clicked and used in SILworX.
Italics:	System parameter and variables
`Courier`	Literal user inputs
RUN	Operating state are designated by capitals
Chapter 1.2.3	Cross references are hyperlinks even though they are not particularly marked. When the cursor hovers over a hyperlink, it changes its shape. Click the hyperlink to jump to the corresponding position.

Safety notes and operating tips are particularly marked.

1.3.1 Safety Notes

The safety notes are represented as described below.
These notes must absolutely be observed to reduce the risk to a minimum. The content is structured as follows:

- Signal word: danger, warning, caution, notice
- Type and source of danger
- Consequences arising from the danger
- Danger prevention

⚠ SIGNAL WORD

Type and source of danger!
Consequences arising from the danger
Danger prevention

The signal words have the following meanings:

- Danger indicates hazardous situation which, if not avoided, will result in death or serious injury.
- Warning indicates hazardous situation which, if not avoided, could result in death or serious injury.
- Warning indicates hazardous situation which, if not avoided, could result in minor or modest injury.
- Notice indicates a hazardous situation which, if not avoided, could result in property damage.

NOTICE

Type and source of damage!
Damage prevention

1.3.2 Operating Tips

Additional information is structured as presented in the following example:

i	The text corresponding to the additional information is located here.

Useful tips and tricks appear as follows:

TIP	The tip text is located here.

2 Safety

All safety information, notes and instructions specified in this manual must be strictly observed. The product may only be used if all guidelines and safety instructions are adhered to.

This product is operated in accordance with SELV or PELV. No imminent danger results from the module itself. The use in Ex-Zone is permitted if additional measures are taken.

2.1 Intended Use

HIMax components are designed for assembling safety-related controller systems.

When using the components in the HIMax system, comply with the following general requirements

2.1.1 Environmental Requirements

Requirement type	Range of values
Protection class	Protection class III in accordance with IEC/EN 61131-2
Ambient temperature	0...+60 °C
Storage temperature	-40...+85 °C
Pollution	Pollution degree II in accordance with IEC/EN 61131-2
Altitude	< 2000 m
Housing	Standard: IP20
Supply voltage	24 VDC

Table 2: Environmental Requirements

Exposing the HIMax system to environmental conditions other than those specified in this manual can cause the HIMax system to malfunction.

2.1.2 ESD Protective Measures

Only personnel with knowledge of ESD protective measures may modify or extend the system or replace modules.

NOTE

Device damage due to electrostatic discharge!

- **When performing the work, make sure that the working area is free of static and wear an ESD wrist strap.**
- **If not used, ensure that the device is protected from electrostatic discharge, e.g., by storing it in its packaging.**

2.2 Residual Risk

No imminent danger results from a HIMax module itself.

Residual risk may result from:

- Faults in the engineering
- Faults in the user program
- Faults in the wiring

2.3 Safety Precautions

Observe all local safety requirements and use the protective equipment required on site.

2.4 Emergency Information

A HIMax controller is a part of the safety equipment of a system. If the controller fails, the system adopts the safe state.

In case of emergency, no action that may prevent the HIMax systems from operating safely is permitted.

3 Product Description

The X-CPU 01 processor module is absolutely required for data processing within the HIMax system. The processor module is used for:

- Processing of up to 32 user programs
- Performing all central functions including communication
- Handling redundancy with up to 3 additional processor modules
- Handling communication via safe**ethernet.**
- Creating and storing CPU events.
- Storing events created by I/O modules.

The module has been certified by the TÜV for safety-related applications up to SIL 3 (IEC 61508, IEC 61511 and IEC 62061), Cat. 4 (EN 954-1) and PL e (EN ISO 13849-1).

Refer to the HIMax Safety Manual (HI 801 003 E) for more information on the standards used to test and certify the modules and the HIMax system.

3.1 Safety Function of the Module

The safety function of the processor module includes the following points:

- Processing the user programs.
  - If faults occur: Stop the user program and reset the variables to the initial values
  - If faults occur: Reset the processor module to the safe state and report the CPU status
- Safe communication between HIMA controllers (HIMax, HIMatrix, and remote I/O modules) using the safety-related safe**etherne**t protocol.
  Data is transferred using either the Ethernet interfaces of the processor module itself or using the Ethernet interfaces of a COM module.

The safety function is performed in accordance with SIL 3.

The following elements also contribute to achieving the safety function:

- Hardware self-tests
- Safe communication with the I/O modules

3.1.1 Reaction in the Event of a Fault

If the test harness detects faults, the processor module enters the ERROR STOP state and restarts itself. The fault cause can be investigated using the diagnostic information.

Start after an Error Stop

If the cause of the fault is still present, the processor module avoids restarting and repeating the error stop:

- After a first error stop, the processor module restarts normally and switches to its system operation.
- After the second error stop, the user must restart the system using the PADT after eliminating the problem.
- Once the processor module has run in system operation for approximately one minute, the next error stop to occur is considered to be as *first* error stop.

3.2 Scope of Delivery

The module must be installed on a suitable connector board to be able to operate. The connector board is described in Chapter 3.6. An Ethernet cable is required to connect to the PADT.

Connector boards and Ethernet cables are not included within the scope of delivery of the module.

3.3 Type Label

The type label specifies the following important details:

- Product name
- Mark of conformity
- Bar code (2D or 1D code)
- Part number (Part-No.)
- Hardware revision index (HW Rev.)
- Software revision index (SW Rev.)
- Operating voltage (Power)
- Ex specifications (if applicable)
- Production year (Prod-Year:)

Figure 1: Sample Type Label

3.4 Structure

The processor module is a plug-in module that is inserted into a base plate and supplied with electric power.

Functional units of the module:

- Safety-related processor system 1oo2
- System controller
- Ethernet switch
- Memory
- Mode switch, see Chapter 3.4.18.
- Indicators, see Chapter 3.4.11.

3.4.1 Block Diagram, Functional Units

The following block diagram illustrates the structure of the module.

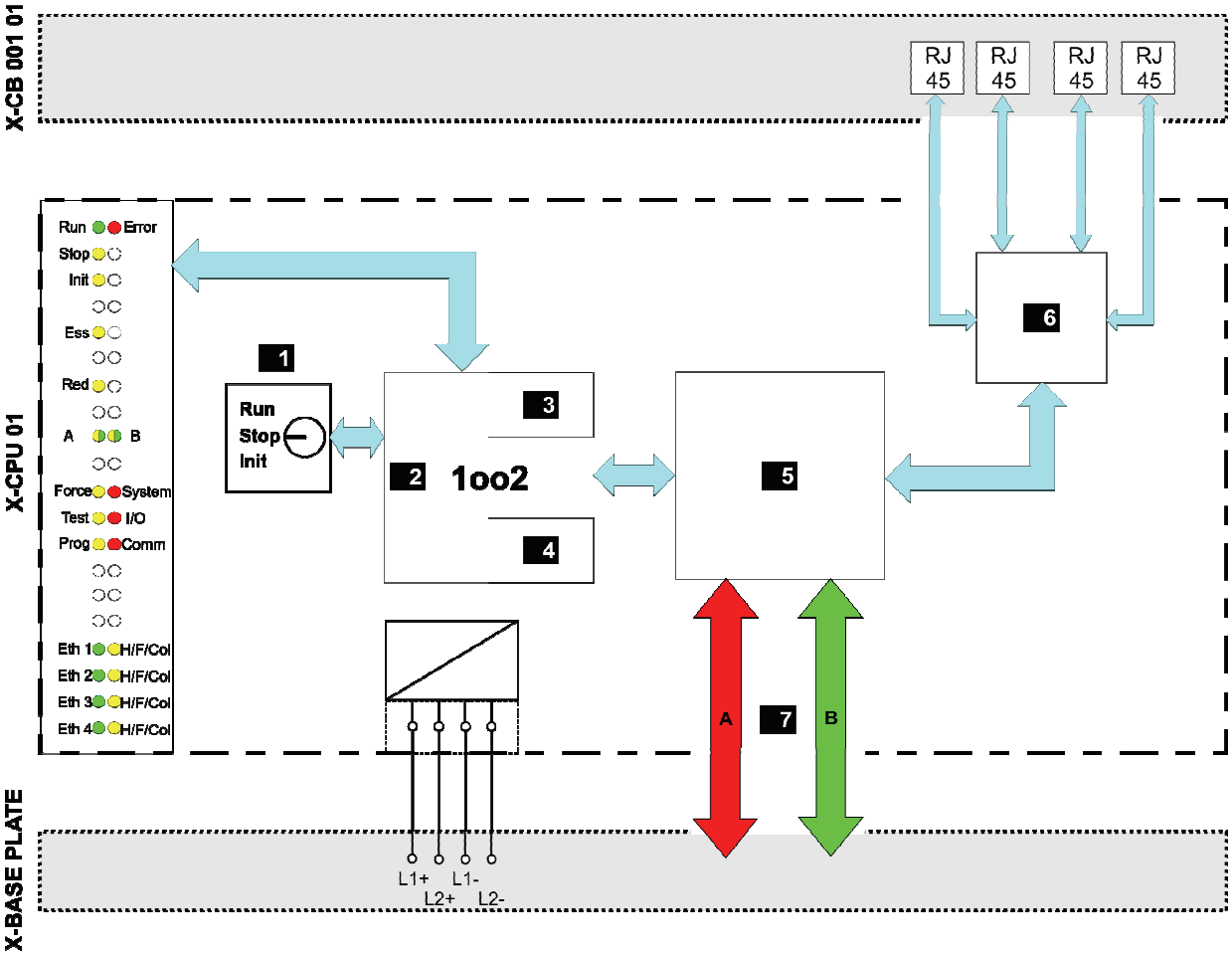

1 Mode Switch
2 1oo2 Processor System
3 Comparator
4 Watchdog
5 System Controller
6 Ethernet Switch
7 System Bus A and System Bus B

Figure 2: Block Diagram

3.4.2 Safety-Related Processor System

The safety-related processor module is a 1oo2 processor system. Continuous self-tests ensure safety-related operation.

Characteristics:

- Two synchronous microprocessors
- Specific DDRAM memory for each microprocessor
- Testable hardware comparator for data buses
- Watchdog (WD)
- Gold capacitor for buffering date/time
- LEDs for indicating the system statuses
- Mode switch for configuring the module behavior when voltage is switched on

The processor module compares the data on both processors and triggers an interrupt if a fault occurs.

A watchdog monitors both processors. Self-tests of the module also check the watchdog.

3.4.3 System Controller

The system controller handles the entire data transfer between the various components of the module:

- Safety-related processor system
- System busses A and B
- Ethernet switch with connected interfaces

3.4.4 Memory

The module has a RAM and a non-volatile memory. The non-volatile memory is protected by a CRC.

The non-volatile memory contains the following programs and information:

- Operating System
- User project
- Enable switch, watchdog time, safety time
- Online modifications
- Variable with the RETAIN attribute
- Production data and, if necessary, trimming data
- Fault status history
- Events

While booting, the system transfers the program code from the non-volatile memory to the redundant program and data memory.

3.4.5 Alarms and Events

The processor module records alarms and other events in its non-volatile memory.

Events are state changes of a variable that are performed by the plant or controllers and are provided with a timestamp.

Alarms are events that signalize an increasing risk potential.

The HIMax system records the state changes as events specifying the time point when they occurred. The X-OPC server transfers the events to other systems such as control systems, that display or evaluate the events.

HIMax differentiate between Boolean and scalar events.

Boolean Events:

- Changes of Boolean variables, e.g., of digital inputs.
- Alarm and normal state: They can be arbitrarily assigned to the variable states.

Scalar Events:

- Exceedance of the limit values defined for a scalar variable.
- Scalar variables have a numeric data type e.g., INT, REAL.
- Two upper limits and two lower limits are possible.
- For the limit values, the following condition must be met:
  Highest limit ≥ upper limit ≥ normal area ≥ lower limit ≥ lowest limit.
- An hysteresis can be effective in the following cases:
  - If the value falls below the upper limit.
  - If the value exceeds the lower limit.

An hysteresis is defined to avoid a needless large number of events when a global variable strongly oscillate around a limit.

The processor module can only create events if they are configured in SILworX, see Chapter 4.1.5.

3.4.6 Creating Events

Both the processor module and certain types of I/O modules are able to create events. In the following sections, these I/O modules are referred to as SOE modules.

Creating Events on the Processor Module

The processor module uses global variables to create the events and stores them in the buffer, see Chapter 3.4.7. The events are created in the user program cycle.

Creating Events on SOE Modules

SOE modules can create events using the input states. The events are created in the SOE module cycle.

The SOE module stores the events in the intermediate buffer that the processor modules use to read them. The intermediate buffer is part of the volatile memory so that the events are lost if the power is switched off.

Every event that has be read can be overwritten by a new event.

System Events

In addition to events, which records changes of global variables or input signals, processor and SOE modules creates the following types of system events:

- Overflow: Some events were not stored due to buffer overflow. The timestamp of the overflow event corresponds to that of the event causing the overflow.
- Init: The event buffer was initialized.
- Operating mode Stop: A SOE module changed its operating mode to STOP.
- Operating mode 'Run': A SOE module changed its operating mode to Run.
- Establishing communication: Communication between processor module and SOE module has started.
- Losing communication: Communication between processor module and SOE module was terminated.

System events contain the SRS identifier of the module causing the events.

Status Variables

Status variables provide the user program with the state of scalar events. Each of the following states is connected to a status variable and can be assigned a global variable of type BOOL:

- Normal.

- Lower limit exceeded.
- Lowest limit exceeded.
- High limit exceeded.
- Highest limit exceeded.

The assigned status variable becomes TRUE when the corresponding state is achieved.

3.4.7 Recording Events

The processor module collects the events:

- created by I/O modules
- created by the processor module itself

The processor module stores all the events in its buffer. The buffer is part of the non-volatile memory.and has a capacity of 5 000 events.

The processor module arranges the events from different sources by the time of their arrival and does not sort them by their timestamp.

If the event buffer is full, no new events can be stored as long as no further events are read and thus marked as to be overwritten.

The OPC server can read the events and make them available to external systems for evaluation and storing.

3.4.8 Protocols and Interfaces

Communication with external systems occurs via the Ethernet interfaces. The interfaces are part of a 10/100/1000 BaseT switch.

The four RJ-45 connectors are located on the connector board. The LEDs on the front plate of the module indicate the connections statuses. For more information, see Chapter 3.4.11.

On these interfaces, the module can process the following protocols:

- The safety-related protocol safe**ethernet**
- Connection to the PADT

Parameter	Value
Number of connectors	4
Transfer standard	10/100/1000 Base-T, half and full duplex
Auto negotiation	Yes
Auto crossover	Yes
Connection socket	RJ-45
IP Address	Freely configurable[1)]
Subnet Mask	Freely configurable[1)]
Supported protocols	safe**ethernet**, PADT
[1)] Observe the general rules valid for assigning IP address and subnet masks.	

Table 3: Specifications for the Ethernet Interfaces

The MAC address of the module is specified on the label on the lower part of the front plate.

3.4.9 Ports in Use for Ethernet Communication

UDP ports	Use
8000:	Programming and operation with SILworX
8001:	Configuring the remote I/O using the PES
6010:	safe**ethernet**
123:	SNTP (time synchronization between PES and remote I/O, PES and external devices)

Table 4: Ports in Use

3.4.10 Mechanical Structure

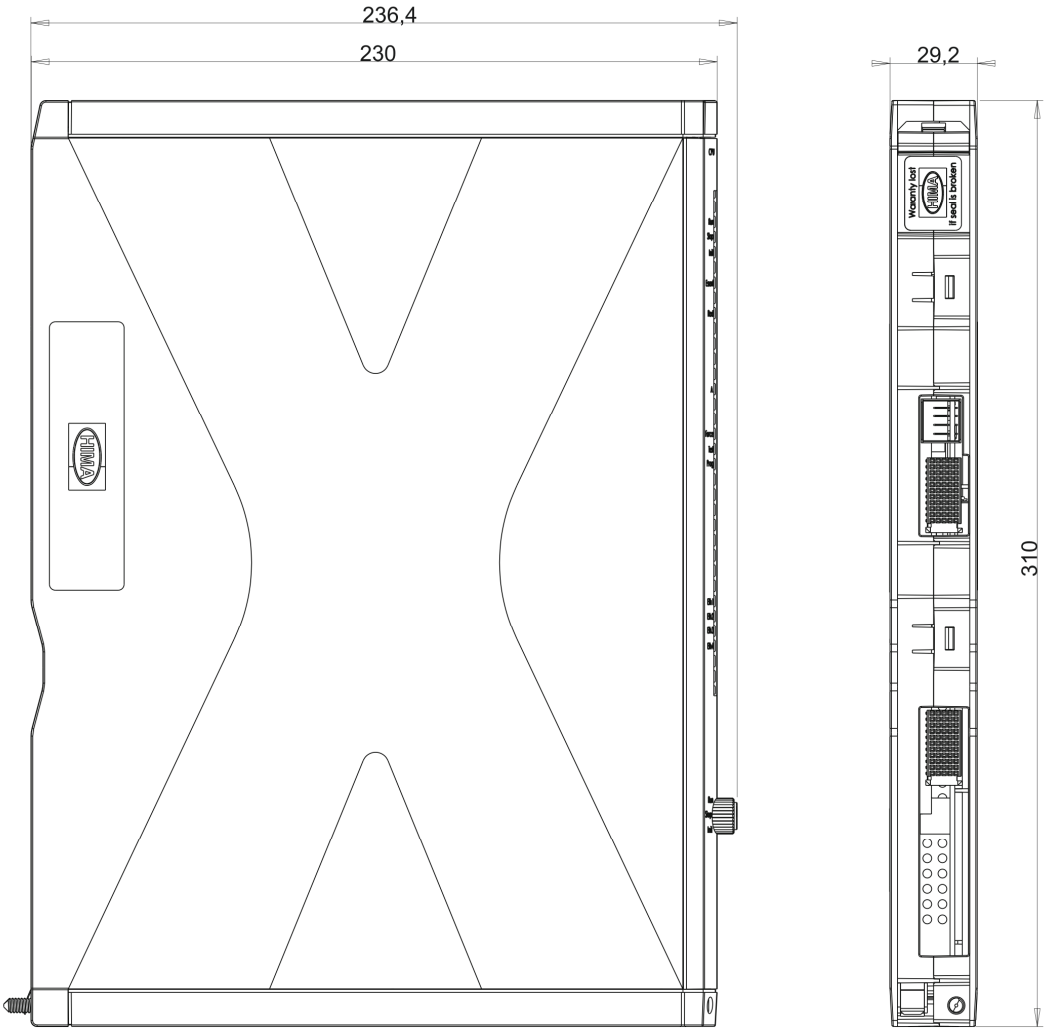

Figure 3: Mechanical Structure

3.4.11 Indicators

The following figure shows the LED indicators for the processor module. These LEDs are located on the front plate, on the upper part of the module. The mode switch described in Chapter 3.4.18 is also located on the front plate of the module.

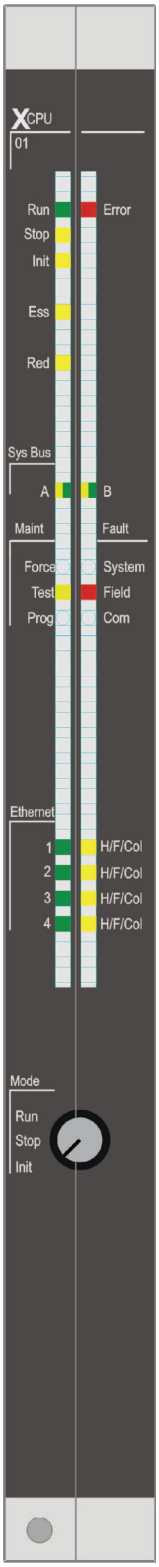

Figure 4: Front View with LEDs and Mode Switch

The LEDs indicate the operating state of the processor module. All LEDs should be considered together. The LEDs on the module are divided into six groups:

- Module status indicators (Run, Error, Stop, Init)
- Redundancy indicators (Ess, Red)
- System bus indicators (A, B)
- Maintenance indicators (Force, Test, Prog)
- Fault indicators (System, Field, Com)
- Ethernet indicators (Eth1...4, H/F/Col1...4)

When the supply voltage is switched on, a LED test is performed and all LEDs briefly flash simultaneously.

Definition of Blinking Frequencies

The following table defines the blinking frequencies of the LEDs:

Name	Blinking Frequencies
Blinking1	Long (approx. 600 ms) on, long (approx. 600 ms) off
Blinking2	Short (approx. 200 ms) on, short (approx. 200 ms) off, short (approx. 200 ms) on, long (approx. 600 ms) off
Blinking-x	Ethernet communication: Flashing in sync with data transfer

Table 5: Blinking Frequencies of LEDs

3.4.12 Module Status Indicators

These LEDs are located on the front plate, on the upper part of the module.

LED	Color	Status	Description
Run	Green	On	Module in RUN, normal operation
		Blinking1	Module state: STOP/OS_DOWNLOAD or OPERATE (only with processor modules)
		Off	Module not in RUN, observe the other status LEDs
Error	Red	On/Blinking1	Internal module faults detected by self-tests, e.g., hardware, software or voltage supply. Fault while loading the operating system
		Off	Normal operation
Stop	Yellow	On	Module state: STOP / VALID CONFIGURATION
		Blinking1	Module state: STOP / INVALID CONFIGURATION or STOP / OS_DOWNLOAD
		Off	Module not in STOP, observe the other status LEDs
Init	Yellow	On	Module state: INIT, observe the other status LEDs
		Blinking1	Module state: LOCKED, observe to the other status LEDs
		Off	Module state: neither INIT nor LOCKED, observe the other status LEDs

Table 6: Module Status Indicators

3.4.13 Redundancy Indicators

LED	Color	Status	Description
Ess	Yellow	On	**Do not remove the module!** The module is absolutely required for operating the HIMax system. Only one module is configured.
		Blinking1	**Do not remove the module!** The module is absolutely required for operating the HIMax system. Multiple redundant modules are configured.
		Off	The module is not absolutely required for operation. It may be removed, if required.
Red	Yellow	On	The module is operating redundantly with at least one additional module.
		Blinking1	At least one processor module starts system operation or less modules than planned are operating redundantly.
		Off	The module is not operating redundantly.

Table 7: Redundancy Indicators

3.4.14 System Bus Indicators

The system bus LEDs are labeled *Sys Bus*.

LED	Color	Status	Description
A	Green	On	Physical and logical connection to the system bus module in slot 1.
		Blinking1	No physical connection to the system bus module in slot 1.
	Yellow	Blinking1	The physical connection to the system bus module in slot 1 has been established. No connection to a (redundant) processor module running in system operation.
B	Green	On	Physical and logical connection to the system bus module in slot 2.
		Blinking1	No physical connection to the system bus module in slot 2.
	Yellow	Blinking1	The physical connection to the system bus module in slot 2 has been established. No connection to a (redundant) processor module running in system operation.
A+B	Off	Off	Neither physical nor logical connection to the system bus modules in slot 1 and slot 2.

Table 8: System Bus Indicators

3.4.15 Maintenance Indicators

The maintenance LEDs are labeled *Maint*.

LED	Color	Status	Description
Force	Yellow	On	Forcing prepared, processor module in STOP, RUN or RUN / UP STOP
		Blinking1	Forcing active, processor module in RUN or OPERATE
		Off	Forcing inactive
Test	Yellow	On	Connection to the PADT with write permission
		Blinking1	At least one user program is in the RUN_FREEZE state (single step operation)
		Off	No connection to the PADT with write access and no user program in the RUN_FREEZE state
Prog	Yellow	On	Download (processor module in STOP), the configuration is being loaded, A PADT write command is being processed
		Blinking1	Reload procedure active or exchange of configuration data between processor modules
		Off	No loading procedure active and no configuration data exchange between processor modules

Table 9: Maintenance Indicators

3.4.16 Fault Indicators

The fault LEDs are labeled *Fault*.

LED	Color	Status	Description
System	Red	On	System warning, only if no module fault occurred in a HIMax system module.
		Blinking1	Faults detected in a HIMax system module, e.g., hardware, software, over temperature or power supply. The module or base plate is missing or does not match the configuration or cannot be operated as intended.
		Off	No module fault displayed for a HIMax system module
Field	Red	On	Field warning, only if no field fault occurred in a HIMax system I/O module
		Blinking1	Field faults in an I/O module of the HIMax system
		Off	No field faults displayed for an I/O module in the HIMax system
Com	Red	On	COM warning, only if no faults occurred in the external process data communication
		Blinking1	Fault in the external process data communication
		Off	No faults displayed for the external process data communication

Table 10: Fault Indicators

3.4.17 Ethernet Indicators

The Ethernet LEDs are labeled *Ethernet*.

LED	Color	Status	Description
Eth 1…4	Green	On	Communication partner connected No communication detected on interface
		Blinking-x	Communication detected on interface.
		Blinking1	IP address conflict detected All Ethernet LEDs are blinking
		Off	No communication partner connected
H/F/Col 1…4	Yellow	On	Full duplex operation on Ethernet line *F*
		Blinking-x	Collisions detected on Ethernet line *Col*
		Blinking1	IP address conflict detected All Ethernet LEDs are blinking
		Off	Half duplex operation on Ethernet line *H*

Table 11: Ethernet Indicators

3.4.18 Mode Switch

The mode switch defines how the processor module behave when restarted.

The processor module is restarted in the following cases:

- Automatically:
  - When connecting the operating voltage
  - After a severe failure
  - After loading the operating system
- During operation, using the corresponding command on the PADT.

The mode switch has three different switch positions:

- Init
- Stop
- Run

The switch position during normal operation is Run.

Switch Position: Init

The Init switch position is used to set the processor module to the LOCKED states. In this state, the settings previously configured for the module can no longer be accessed. This can be required if, for instance, the administrator password is unknown.

In the LOCKED state, the module is reset to the factory settings:

- Default SRS, the slot number depends on the slot used
- Default IP address and IP settings
- Only accessible for *Administrator* user account with empty password
- Enabling switches set to default values

Setting values that are are modified in this state overwrite the factory settings and all the settings previously used!

If the settings remain unchanged, the previously saved settings are used when the module is restarted (the switch is not set to Init).

Transition from LOCKED State to Exclusive System Operation

Prerequisite:

- Processor module state: LOCKED

The system operation is started if one of the following events occur:

- The position of the mode switch changes from Init to Run or Stop
- The user sends a command from within the PADT.

---

i The controller might not restart automatically after interrupting the operating voltage

If the mode switch of one processor module is in the Init position and this processor module is accidentally the first to be started when the operating voltage is reconnected, it remains in the LOCKED state and does not adopt system operation.

If an Autostart is required after interrupting the operating voltage, the mode switches on all the processor modules must be set to Run!

---

i Turn the mode switch quickly from Init to Run to prevent the processor module from entering the STOP state.

Switch Position: Stop

Only operative if the processor module is not operating redundantly.

Effect:

- Non-redundant operation:
  The processor module disables any pre-configured Autostart and remains in STOP.
- Redundant operation:
  The processor module adopts the same operating state as the other processor modules.

---

i The controller might not restart automatically after interrupting the operating voltage

If the mode switch of one processor module is in the Stop position and this processor module is accidentally the first to be started when the operating voltage is reconnected, it remains in the STOP state. Consequentially, also the remaining processor modules cannot start.

If an Autostart is required after interrupting the operating voltage, the mode switches on all the processor modules must be set to Run!

Switch Position: Run

To set for safety-related operation!

Effect:

- Non-redundant operation:
  The processor module starts the user programs if Autostart is activated.
- Redundant operation:
  The processor module adopts the same operating state as the other processor modules.

Overview of Switch Positions

Module behavior if the module starts after switching on the operating voltage or after a fault:

Switch Position	Only individual processor module	Additional processor module (redundant operation)
Init	Enters the LOCKED state with the factory settings	
Switch from Init to Stop	Enters the STOP state	Starts redundant operation
Switch from Init to Run	Starts operation, if the *Autostart* system parameter is set to TRUE	
Init: Command from PADT ▪ System operation ▪ Cold Start	Enters RUN state (mono operation)	
Stop	Enters the STOP state	
Run	Executes the user programs.	

Table 12: Overview of the Mode Switch Positions

3.4.19 Monitoring the Operating Voltage

The HIMax processor module monitors its supply voltages L1+/L1-, L2+/L2-. The following applies for each supply voltage:

Voltage level	Voltage status
< approx. 18 V	supply voltage faulty
otherwise	Supply voltage OK

Table 13: Supply Voltage Status

NOTE

Controller damage due to excessively high operating voltage!

Do not connect supply voltage exceeding 30 volts

3.4.20 Monitoring the Temperature

Sensors continuously monitor the operating temperature of the modules.

The temperature status of a processor module indicates wether the temperature thresholds have been exceeded with respect to the following environment temperature ranges:

Temperature range (approx.)	Temperature status
< 40 °C	Temperature OK
40...60 °C	Temperature threshold 1 exceeded
> 60 °C	Temperature threshold 2 exceeded

Table 14: Temperature Status

If the temperature exceeds a specific threshold or falls below it, the temperature status changes.

Table 14 applies to normal operation with operating fans. In case of abnormal operation, e.g., without fans, the temperature status can indicate that the temperature thresholds have been exceeded even at a lower environment temperature.

The temperature status is a status of the processor module. After logging in to the processor module, the module status is displayed in the SILworX Control Panel.

NOTE

Module damage due to overtemperature!

The HIMax modules may only be operated in conjunction with a X-FAN 01 Fan Rack or a replacement type.

3.4.21 Operating System

The operating system loaded into the CPU contains all basic functions of the HIMax programmable electronic system (PES), for example:

- Processing the user programs,
- Performing all test routines for hardware and software
- Cycle time monitoring (watchdog)
- Safe communication with the I/O modules
- Safe communication with other systems, such as:
  - HIMax
  - HIMatrix
- Creating and storing events.

For a description of the operating system functions, see the System Manual (HI 801 001 E).

Cycle Processing

A CPU cycle runs through the following phases:

- Reading the input data
- Processing the user programs
- Writing the output data
- Other activities, e.g., reload processing.

3.5 Product Data

Parameter	Value
Supply voltage	24 VDC, -15 %...+20 %, r_P ≤ 5 %, SELV, PELV
Current input	1.4 A
Fuse (internal)	7.5 A
Microprocessor	PowerPC
Flash EPROM	128 MB
DDRAM, NVRAM	256 MB
Program memory for each user program	1023 kB
Data memory for variables per user program	1023 kB
Total program and data memory for all user programs	10 MB less 4 kBytes for CRCs
Data memory for retain variables	
per user program	2 kB
A total for all user programs	32 kB
Number of variables being able to trigger events	20 000
Number of events that can be stored	5000
Safety time	≥ 20 ms, depending on the application
Buffer for date/time	Gold capacitor
Operating temperature	0 °C...+60 °C
Storage temperature	-40 °C...+85 °C
Humidity	max. 95 % relative humidity, non-condensing
Type of protection	IP20
Dimensions (H x W x D) in mm	approx. 310 x 29.2 x 236
Weight	approx. 1.3 kg

Table 15: Product Data

3.6 Connector Board

The X-CB 001 01 connector board connects the module with other HIMA controllers or with the PADT. Module and connector board form together a functional unit. The connector board contains the four ports (Eth1...Eth4) of the Ethernet switch on the processor module.

3.6.1 Connecting Options

- Connection to other HIMA controllers.
- Connection of the PADT

Figure 5: X-CB 001 01 Connector Board

Designation	Description
Ethernet Interfaces	
Eth1, X3	Connections for Ethernet: Chapter 3.4.9 describes the characteristics of the external Ethernet connections. The pin assignment of the RJ-45 connectors complies with the applicable standards.
Eth2, X4	
Eth3, X5	
Eth4, X6	

Table 16: Pin Assignment of X-CB 001 01

4 Start-up

To start up the processor module, insert the processor module into a permissible base plate slot, see Chapter 4.1.1. If the base plate is already operating, the processor module starts and adopts the operating state set through its configuration and the mode switch position. If the base plate is not operating, connect the supply voltage.

4.1 Mounting

Observe the following points when installing the processor module:

- The module is intended for use within a HIMax base plate. For more information on the base plate structure, refer to the corresponding system documentation.
- Only operate processor modules in the intended slots
- Only operate the module with forced cooling (X-FAN).
- Only operate the module with the suitable connector board. For more information, see Chapter 3.6.
- Effects of removing and inserting the module:
  When removing the module, the connector board remains in the HIMax base plate. Since all of the external interfaces are connected via the module's connector board, a module can be replaced without affecting the external interfaces
- The SRS of the module is stored to the connector board and becomes after the module is plugged in.
- Effects of pulling and plugging the plugs
  Pulling the plugs interrupts the external communication.
  Take appropriate grounding measures.

NOTE

Electrostatic discharge!

Failure to comply with these instructions can destroy the connector board and/or the module.

- **Make sure that the workspace is free of static and wear an ESD wrist strap.**
- **If not used, ensure that the device is protected from electrostatic discharge, e.g., by storing it in its packaging.**

- Effects of EMC influences
  Exposing the module to environmental influences other than those specified in the manual may lead to malfunctions or even the destruction of the module.

NOTE

Controller damage or system malfunction possible!

Only expose the module to permissible environmental influences, see Chapter 2.1.1

4.1.1 Slots Permitted for the Processor Module

The following rules must be observed when assigning the slots to the processor modules, also in the Hardware Editor:

1. A maximum of four processor modules may be used.
2. Processor modules may only be inserted in the following slots:
   - Slots 3 to 6 on rack 0.
   - Slots 3 to 4 on rack 1.
3. Slot 5 on Rack 0 and Slot 4 on Rack 1 may not simultaneously contain processor modules..
4. Slot 6 on Rack 0 and Slot 3 on Rack 1 may not simultaneously contain processor modules..

NOTE

System malfunction possible!

Only slots complying with these rules may be used for processor modules.

The table specified the recommended variants complying with the rules:

Variant	Base plate 0 Processor module(s) in slot:	Rack 1 Processor module(s) in slot:	Required system busses
1	3 for mono operation[1)]	-	A
2	3	-	A + B
3	3, 4	-	A + B
4	3, 4, 5	-	A + B
5	3, 4, 5, 6	-	A + B
6	3	3	A + B
7	3, 4	3	A + B
8	3, 4	3, 4	A + B
9	3, 4, 5	3	A + B

[1)] Mono operation:The project is configured in SILworX for mono operation and has only one processor module in slot 3, at least one system bus module in slot 1, I/O modules and possibly communication modules. The switch for mono start-up must be set within SILworX. It is always possible (and recommended!) to configure the system bus modules redundantly!

Table 17: Slot Positions Recommended for Processor Modules

HIMA recommends to use variant 3 even if variant 1 would be possible. In doing so, the processor module can be replaced without interrupting operation.

Since the operating system is designed to ensure maximum availability, other combinations are possible, but not recommended. This allows HIMax to offer more flexibility, e.g., when replacing modules or modifying the system. However, after such measures have been completed, the system should be structured such that it corresponds to one of the recommended variants noted in Table 17.

4.1.2 Mounting a Connector Board

Tools and utilities

- Screwdriver, slotted 0.8 x 4.0 mm
- Matching connector board

To install the connector board

1. Insert the connector board into the guiding rail with the groove facing upwards (see following figure). Fit the groove into the guiding rail pin.
2. Place the connector board on the cable shield rail.
3. Secure the two captive screws to the base plate. First screw in the lower than the upper screw.

To remove the connector board

1. Release the captive screws from the base plate.
2. Lift the lower section of the connector board from the cable shield rail.
3. Remove the connector board from the guiding rail.

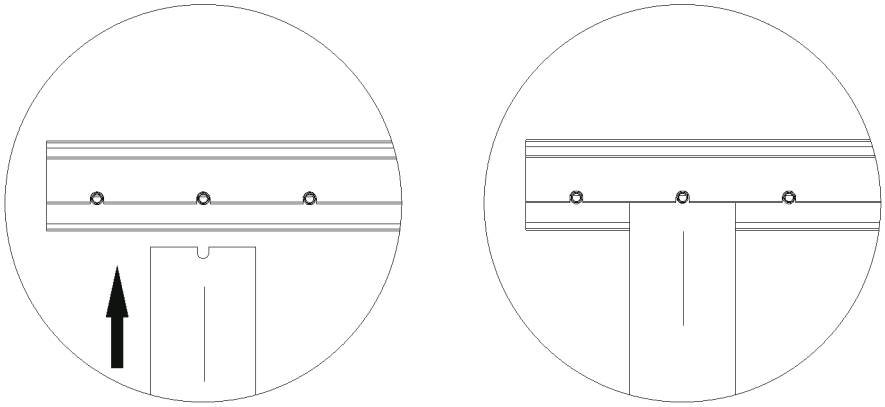

Figure 6: Inserting the Connector Board

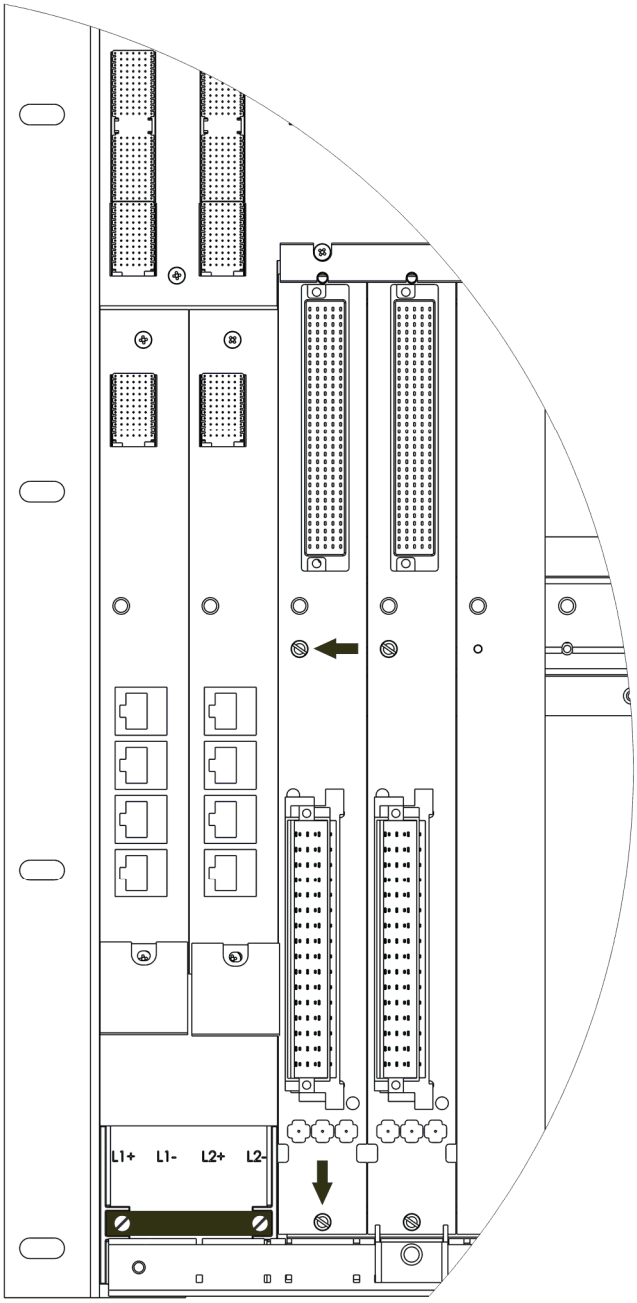

Figure 7: Securing the Connector Board with Captive Screws

4.1.3 Mounting and Removing the Module

This chapter describes how to mount and remove the HIMax module. A module can be mounted and removed while the HIMax system is operating.

NOTICE

Damage to bus and power sockets due to module jamming!

Failure to observe this can damage the controller.

Always take care when inserting the module in the base plate.

Tools and utilities

- Screwdriver, slotted 0.8 x 4.0 mm
- Screwdriver, slotted 1.2 x 8.0 mm

Installation

1. Open the cover plate on the fan rack:
   ☑ Move the locks to the *open* position.
   ☑ Lift the cover plate and insert into the fan rack
2. Insert the top of the module into the hook-in rail, see 1.
3. Swivel the lower edge of the module towards the base plate and apply light pressure to snap it into place, see 2.
4. Tighten the screws, see 3.
5. Pull the cover plate out of the fan rack and close it.
6. Lock the cover plate.

Removal

1. Open the cover plate on the fan rack:
   ☑ Move the locks to the *open* position.
   ☑ Lift the cover plate and insert into the fan rack
2. Release the screw 3.
3. Swivel the lower edge of the module away from the base plate. Lift and apply light pressure to remove the module from the hook-in rail, see 2 and 1.
4. Pull the cover plate out of the fan rack and close it.
5. Lock the cover plate.

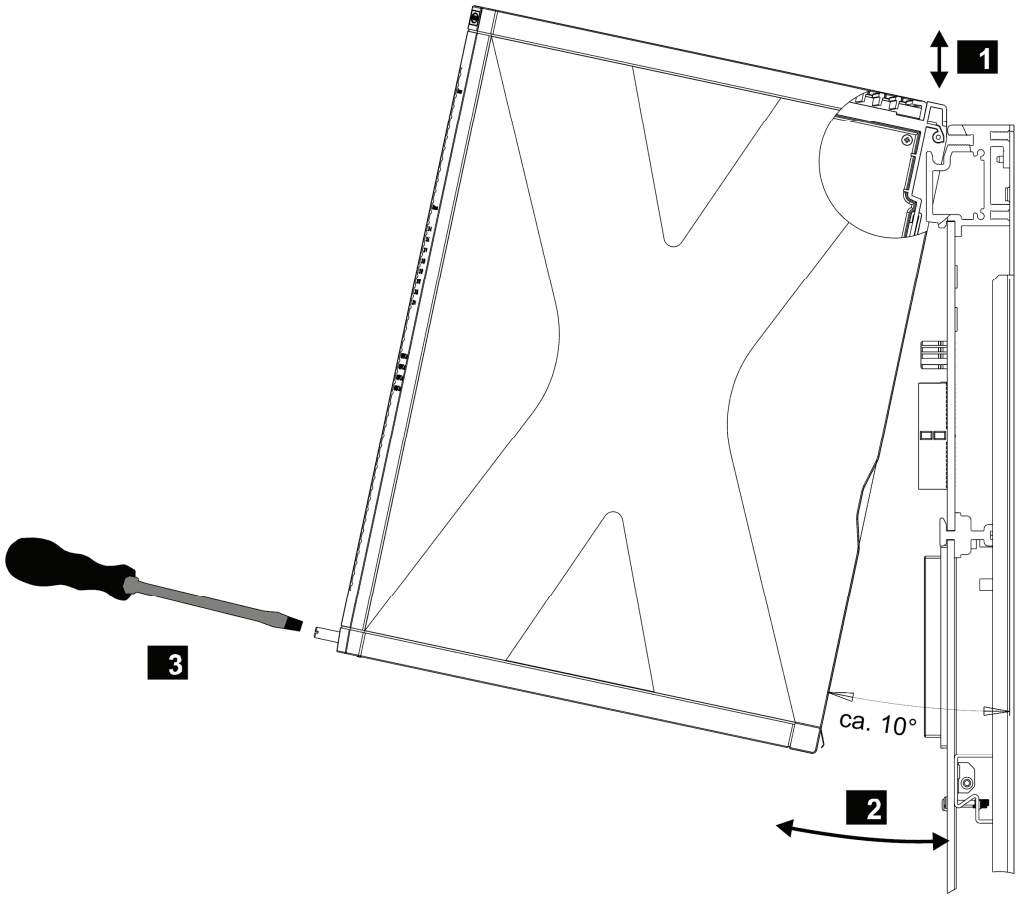

1 Inserting and Removing a Module
2 Swiveling a Module in and out
3 Securing and Releasing a Module

Figure 8: Mounting and Removing a Module

i If the HIMax system is operating, do not open the cover plate of the fan rack for more than a few minutes (< 10 min) since this affects the forced cooling.

4.1.4 Configuring the Module in SILWorX

The processor module is configured in the SILworX Hardware Editor.

The Ethernet interface of the processor module must be configured. Each of the following chapters describes a detail view tab.

Ensure proper setting ot the IP address!

Module

Designation	Description
Name	Name of the communication module.
Use Max. µP Budget for HH Protocol	▪ Activated: Use CPU load limit from the field *Max. µP Budget for HH Protocol [%].* ▪ Deactivated: Do not use the CPU Load limit for safe**ethernet.**
Max. µP Budget for HH Protocol [%]	Maximum CPU load of module that can be used for processing the safe**ethernet** protocols. i The maximum load must be distributed among all the implemented protocols that use this communication module.
IP Address	IP address of the Ethernet interface.
Subnet Mask	32 bit address mask to split up the IP address in network and host address.
Standard interface	Activated: the interface is used as standard interface for the system login. Default setting: Deactivated
Default Gateway	IP address of the default gateway.
ARP Aging Time [s]	A processor or COM module stores the MAC addresses of the communication partners in a MAC/IP address assignment table (ARP cache). If in a period of 1x....2x *ARP Aging Time ...* ▪ ... messages of the communication are received, the MAC address remains stored in the ARP cache. ▪ ... no messages of the communication partner are received, the MAC address is erased from the ARP cache. The typical value for the *ARP Aging Time* in a local network ranges from 5...300 s. The user cannot read the contents of the ARP cache. Range of values: 1...3600 s Default value: 60 s **Note:** If routers or gateways are used, the user must adjust (increase) the *ARP Aging Time* due to the additional time required for two-way transmission. If the *ARP Aging Time* is too low, the MAC address of the communication partner is erased from the ARP cache, the communication is delayed or interrupted. For an efficient performance, the ARP aging time value must be less than the receive timeout set for the protocols in use.

MAC Learning	MAC Learning and *ARP Aging Time* are used to set how quick the Ethernet switch should learn the MAC address. The following settings are possible: ▪ Conservative (recommended): If the ARP cache already contains MAC addresses of communication partners, these are locked and cannot be replaced by other MAC addresses for at least one *ARP Aging Time* and a maximum of two *ARP Aging Time* periods. This ensures that data packets cannot be intentionally or unintentionally forwarded to external network participants (ARP spoofing). ▪ Tolerant: When a message is received, the IP address contained in the message is compared to the data in the ARP cache and the MAC address stored in the ARP cache is immediately overwritten with the MAC address from the message. The *Tolerant* setting must be used if the availability of communication is more important than the authorized access to the controller. Default setting: Conservative
IP Forwarding	Allow a system bus module to operate as router and to forward data packets to other network nodes. Default setting: Deactivated
ICMP Mode	The Internet Control Message Protocol (ICMP) allows the higher protocol layers to detect error states on the network layer and optimize the transmission of data packets. Message types of Internet Control Message Protocol (ICMP) supported by the processor module: ▪ No ICMP Responses All the ICMP commands are deactivated. This ensures a high degree of safety against potential sabotage that might occur over the network. ▪ Echo Response If Echo Response is activated, the node responds to a ping command. It is thus possible to determine if a node can be reached. Safety is still high. ▪ Host Unreachable Not important for the user. Only used for testing at the manufacturer's facility. ▪ All Implemented ICMP Responses All ICMP commands are activated. This allows a more detailed diagnosis of network malfunctions. Default setting: Echo Response

Table 18: Configuration Parameters

Routings

The **Routings** tab contains the routing table. This table is empty if the module is new. A maximum of 8 routing entries are possible.

Designation	Description
Name	Denomination of the routing settings
IP Address	Target IP address of the communication partner (with direct host routing) or network address (with subnet routing). Range of values: 0.0.0.0 ... 255.255.255.255 Default value: 0.0.0.0
Subnet Mask	Define the target address range for a routing entry. 255.255.255.255 (with direct host routing) or subnet mask of the addressed subnet. Range of values: 0.0.0.0 ... 255.255.255.255 Default value: 255.255.255.255
Gateway	IP address of the gateway to the addressed network. Range of values: 0.0.0.0 ... 255.255.255.255 Default value: 0.0.0.1

Table 19: Routing Parameters

Ethernet Switch

Designation	Description
Port	Port number as printed on the housing; per port, only one configuration may exist. Range of values: 1...4
Speed [Mbit/s]	10 Mbit/s: Data rate 10 Mbit/s 100 Mbit/s: Data rate 100 Mbit/s 1000 Mbit/s: Data rate 1000 Mbit/s (processor module) Autoneg (10/100/1000): Automatic baud rate setting Default value: Autoneg
Flow Control	Full duplex: Simultaneous communication in both directions Half duplex: Communication in one direction Autoneg: Automatic communication control Default value: Autoneg
Autoneg also with Fixed Values	The *Advertising* function (forwarding the speed and flow control properties) is also performed if the parameters *Speed* and *Flow Control* have fixed values. This allows other devices with ports set to *Autoneg* to recognize the HIMax port settings.
Limit	Limit the inbound multicast and/or broadcast packets. Off: No limitation Broadcast: Limit broadcast packets (128 kbit/s) Multicast and Broadcast: Limit multicast and broadcast packets (1024 kbit/s) Default value: Broadcast

Table 20: Ethernet Switch Parameters

VLAN (Port-Based VLAN)

For configuring the use of port-based VLAN.

i Should VLAN be supported, port-based VLAN should be off to enable each port to communicate with the other switch ports.

For each port on one switch, the user can define which other ports of the switch received Ethernet frames may be sent to.
The table in the VLAN tab contains entries through which the connection between two ports can be set as active or inactive.

Default setting: All connection between ports *active*

LLDP

With LLDP (Link Layer Discovery Protocol), information such as MAC address, device name, port number is sent per multicast in periodic intervals via the own device and is received from the neighboring devices.

LLDP uses the following values depending on whether PROFINET is configured on the communication module.

PROFINET on the COM module	ChassisID	TTL (Time to Live)
Used	Device name	20 s
Not used	MAC Address	120 s

Table 21: Values for LLDP

The processor and communication modules support LLDP on the Eth1, Eth2, Eth3 and Eth4 ports

The following parameters define how a given port should work:

Off	LLDP is disabled on this port.
Send	LLDP sends LLDP Ethernet frames, received LLDP Ethernet frames are deleted without being processed.
Receive	LLDP sends no LLDP Ethernet frames, but received LLDP Ethernet frames are processed.
Send/Receive	LLDP sends and processes received LLDP Ethernet frames.

Default setting: OFF

Mirroring

Mirroring is used to configure whether the module should duplicate Ethernet packets on a given port such that they can be read from a device connected to that port, e.g., for test purposes.

The following parameters define how a given port should work:

Off	This port does not participate to the mirroring process.
Egress:	Outgoing data of this port are duplicated.
Ingress:	Incoming data of this port are duplicated.
Ingress/Egress:	Incoming and outgoing data of this port are duplicated.
Dest Port:	This port is used to send duplicated data.

Default setting: OFF

4.1.5 Configuring Events in SILworX

Event Definition

1. Define a global variable for each event. Generally use global variables that have already been defined for the program.
2. Below the resource, create a new **Alarm & Events** branch, if not existing.
3. Define events in the Alarm & Event Editor.
   - Drag global variables into the event window for Boolean or scalar events.
   - Define the details of the events, see Table 22 and Table 23.

The events are defines.

For further information, refer to the SILworX online help.

The parameters of the Boolean events must be entered in a table with the following columns:

Column	Description	Range of Values
Name	Name for the event definition; it must be unique within the resource.	Text, max. 32 characters.
Global variable	Name of the assigned global variable (added using a drag&drop operation)	
Data type	Data type of the global variable; it cannot be modified.	BOOL
Event source	CPU event The processor module creates the timestamp. It creates all the events in each of its cycle. I/O event A suitable I/O module (e.g., AI 32 02) creates the timestamp. Auto event The timestamp is created by a suitable I/O module, if assigned, otherwise by the processor module. Default value: Auto	CPU, I/O, Auto
Alarm when FALSE	Activated If the global variable value changes from TRUE to FALSE, an event is triggered. Deactivated If the global variable value changes from FALSE to TRUE, an event is triggered. Default value: Deactivated	Checkbox activated, deactivated
Alarm Text	Text specifying the alarm state	Text
Alarm priority	Priority of the alarm state Default value: 500	0...1000
Alarm Acknowledgment Successful	Activated The alarm state must be confirmed by the user (acknowledgement) Deactivated The alarm state may not be confirmed by the user Default value: Deactivated	Checkbox activated, deactivated
Return to Normal Text	Text specifying the alarm state	Text
Return to Normal Severity	Priority of the normal state	0...1000
Return to Normal Ack Required	The normal state must be confirmed by the user (acknowledgement) Default value: Deactivated	Checkbox activated, deactivated

Table 22: Parameters for Boolean Events

The parameters of the scalar events must be entered in a table with the following columns:

Column	Description	Range of Values
Name	Name for the event definition; it must be unique within the resource.	Text, max. 32 characters
Global variable	Name of the assigned global variable (added using a drag&drop operation)	
Data type	Data type of the global variable; it cannot be modified.	depending on the global variable type
Event source	CPU event: The processor module creates the timestamp. It creates all the events in each of its cycle. I/O event: A suitable I/O module (e.g., AI 32 02) creates the timestamp. Auto event: The timestamp is created by a suitable I/O module, if assigned, otherwise by the processor module. Default value: Auto	CPU, I/O, Auto
HH Alarm Text	Text specifying the alarm state of the highest limit value.	Text
HH Alarm Value	Highest limit value triggering an event. Condition: (HH Alarm Value - Hysteresis) > H Alarm Value or HH Alarm Value = H Alarm Value	depending on the global variable type
HH Alarm Priority	Priority of the upper limit; default value: 500	0...1000
HH Alarm Acknowledgment Required	Activated: The user must confirm that the highest limit value has been exceeded (acknowledgment). Deactivated: The user may not confirm that the highest limit value has been exceeded. Default value: Deactivated	Checkbox activated, deactivated
H Alarm Text	Text specifying the alarm state of the upper limit value.	Text
H Alarm Value	Upper limit value triggering an event. Condition: (H Alarm Value - Hysteresis) > (L Alarm Value + Hysteresis) or H Alarm Value = L Alarm Value	depending on the global variable type
H Alarm Priority	Priority of the upper limit; default value: 500	0...1000
H Alarm Acknowledgment Required	Activated: The user must confirm that the upper limit value has been exceeded (acknowledgment). Deactivated: The user may not confirm that the upper limit value has been exceeded. Default value: Deactivated	Checkbox activated, deactivated
Return to Normal Text	Text specifying the normal state	Text
Return to Normal Severity	Priority of the normal state; default value: 500	0...1000
Return to Normal Ack Required	The normal state must be confirmed by the user (acknowledgement); default value: Deactivated	Checkbox activated, deactivated
L Alarm Text	Text specifying the alarm state of the lower limit value.	Text
L Alarm Value	Lower limit value triggering an event. Condition: (L Alarm Value + Hysteresis) < (H Alarm Value - Hysteresis) or L Alarm Value = H Alarm Value	depending on the global variable type
L Alarm Priority	Priority of the lower limit; default value: 500	0...1000
L Alarm Acknowledgment Required	Activated: The user must confirm that the lower limit value has been exceeded (acknowledgment). Deactivated: The user may not confirm that the lower limit value has been exceeded. Default value: Deactivated	Checkbox activated, deactivated
LL Alarm Text	Text specifying the alarm state of the lowest limit value.	Text
LL Alarm Value	Lowest limit value triggering an event. Condition: (LL Alarm Value + Hysteresis) < (L Alarm Value) or LL Alarm Value = L Alarm Value	depending on the global variable type

Column	Description	Range of Values
LL Alarm Priority	Priority of the lowest limit; default value: 500	0...1000
LL Alarm Acknowledgment Required	Activated: The user must confirm that the lowest limit value has been exceeded (acknowledgment). Deactivated: The user may not confirm that the lowest limit value has been exceeded. Default value: Deactivated	Checkbox activated, deactivated
Alarm Hysteresis	The hysteresis avoids that many events are continuously created when the process value often oscillate around a limit.	depending on the global variable type

Table 23: Parameters for Scalar Events

NOTICE

Faulty event recording due wrong parameter settings possible!

Setting the parameters *L Alarm Value* and *H Alarm Value* to the same value can cause an unexpected behavior of the event recording since no normal range exists in such a case.

For this reason, make sure that *L Alarm Value* and *H Alarm Value* are set to different values.

4.1.6 User Program

Which application function the PES should perform is specified in the user program. The PADT is used to create and compile the project configuration with the user program, and to load it into the processor module.

4.1.7 Starting the Processor Module

The processor module can be started as described below:

- Inserting it into a base plate supplied with operating voltage
- Switching on the operating voltage for the base plate in which the module is inserted.

The module's behavior while it is starting up depends on:

- Position of the mode switch (see 3.4.18)
- Existence of additional, redundant processor modules
- Existence of a valid project configuration (user programs included) in the non-volatile memory

With the switch set to Stop or Run, the processor module checks if any other processor modules exist

- If no other processor modules exist, the module starts operation alone.
- If at least one additional processor module exists, the module attempts to automatically start operation using the configuration of the existing processor module(s). Safety-related operation is maintained.

For more information on how to start up modules, refer to the HIMax System Manual (HI 801 001 E).

The instructions specified in the Safety Manual (HI 801 003 E) must also be observed.

Starting up Several Processor Modules

If the supply voltage is connected for a HIMax system containing several processor modules, the processor modules themselves determine which processor module will start the first. The system automatically controls the start order.

If the mode switch on the first processor module is in the Run position, the system starts automatically, provided that Autostart was previously configured. All remaining processor modules follow and start system operation, unless their switch position is set to is Init.

If the mode switch of the first processor module is in the Stop position, this processor module adopts the STOP state and the user program does not start. All remaining processor modules follow and enter the STOP state, unless their switch position is set to Init, see Chapter 3.4.18.

The Init switch position does not influence the other processor modules.

i Before switching on the supply voltage, set the mode switch of all processor modules to the Run position to ensure that the system can safely start system operation.

5 Operation

The module is operated within a HIMax base plate. No specific monitoring is required.

5.1 Handling

Direct handling of the module is not foreseen.

The module's user program is operated, e.g., started or stopped, from within the PADT. For more details, refer to the SILworX documentation.

5.2 Diagnosis

LEDs on the front side of the module indicate the module state, see Chapter 3.4.11.

The processor module has a diagnostic memory that can be read using the PADT. The diagnostic memory can store up to 1500 diagnostic messages for the short term diagnosis and 2500 diagnostic messages for the long time diagnosis.

---

i If a module is plugged in to a base plate, it generates diagnostic messages during its initialization phase indicating faults such as incorrect voltage values.

These messages only indicate a module fault if they occur after the system starts operation.

---

6 Maintenance

Defective modules must be replaced with a faultless module of the same type or with an approved replacement model.

Only the manufacturer is authorized to repair the module.

When replacing modules, observe the instructions specified in the System Manual (HI 801 001 E) and Safety Manual (HI 801 003 E).

6.1 Maintenance Measures

The following measures are required for the processor module:

- Loading the operating system, if a new version is required
- Executing the proof test

6.1.1 Loading the Operating System

HIMA is continuously improving the operating system of the module. HIMA recommends to use system downtimes to load the current version of the operating system into the module.

For detailed instructions on how to load the operating system, see the System Manual (HI 801 001 E) and the online help. For loading the operating system, the processor module must be in the **OutOfRed** state (displayed in SILworX). Otherwise, stop the system operation of the processor module.

---

i The current version of the module in use is displayed in the SILworX Control Panel! The type label specifies the version when the module is delivered, see Chapter 3.3.

6.1.2 Proof Test

HIMax modules must be subjected to a proof test in intervals of 10 years. For more information, refer to the Safety Manual HI 801 003 E.

7 Decommissioning

To decommission the module, remove it from the base plate. For more information, see *Mounting and Removing the Module*.

8 Transport

To avoid mechanical damage, HIMax components must be transported in packaging.

Always store HIMax components in their original product packaging. This packaging also provides protection against electrostatic discharge. Note that the product packaging alone is not suitable for transport.

9 Disposal

Industrial customers are responsible for correctly disposing of decommissioned HIMax hardware. Upon request, a disposal agreement can be arranged with HIMA.

All materials must be disposed of in an ecologically sound manner.

Appendix

Application Examples

These examples show how to use redundant processor modules in one and two base plates.

Redundant Processor Modules in one Rack

Up to four redundant X-CPU 01 modules can be used in rack 0. These modules must be plugged in to slots 3, 4, 5 and 6.

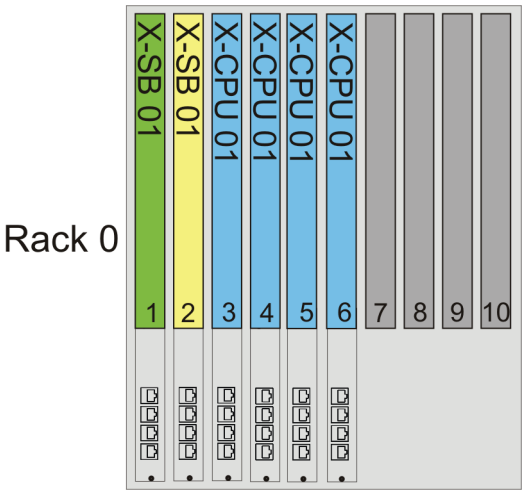

Figure 9: Four Redundant Processor Modules in Rack 0

Redundant Processor Modules in two Racks

The redundant processor modules in use can only be distributed on racks 0 and 1. Use slots 3 and 4 respectively.

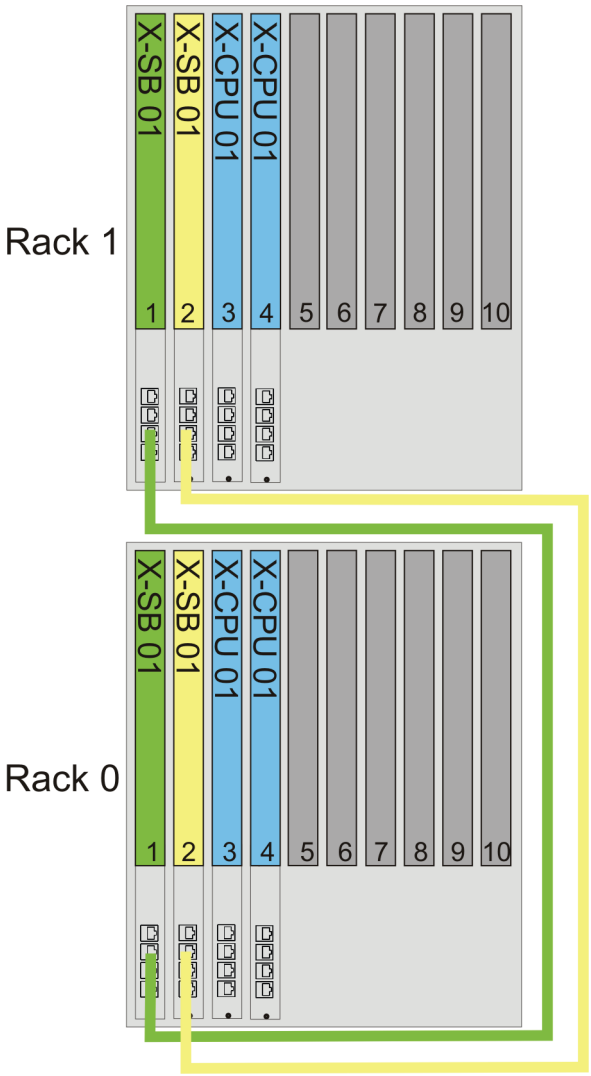

Figure 10: Four Redundant Processor Modules Installed in Rack 0 and Rack 1

Glossary

Term	Description
ARP	Address Resolution Protocol: Network protocol for assigning the network addresses to hardware addresses
AI	Analog Input
Connector Board	Connector board for the HIMax module
COM	Communication module
CRC	Cyclic Redundancy Check
DI	Digital Input
DO	Digital Output
EMC	Electromagnetic Compatibility
EN	European Norm
ESD	ElectroStatic Discharge
FB	Fieldbus
FBD	Function Block Diagram
FTT	Fault Tolerance Time
ICMP	Internet Control Message Protocol: Network protocol for status or error messages
IEC	International Electrotechnical Commission
MAC address	Hardware address of one network connection (Media Access Control)
PADT	Programming And Debugging Tool (in accordance with IEC 61131-3), PC with SILworX
PE	Protective Earth
PELV	Protective Extra Low Voltage
PES	Programmable Electronic System
PFD	Probability of Failure on Demand, probability of failure on demand of a safety function
PFH	Probability of Failure per Hour, probability of a dangerous failure per hour
R	Read
Rack ID	Base plate identification (number)
Non-reactive	Supposing that two input circuits are connected to the same source (e.g., a transmitter). An input circuit is termed "non-reactive" if it does not distort the signals of the other input circuit.
R/W	Read/Write
SB	System Bus (Module)
SELV	Safety Extra Low Voltage
SFF	Safe Failure Fraction, portion of safely manageable faults
SIL	Safety Integrity Level (in accordance with IEC 61508)
SILworX	Programming tool for HIMax
SNTP	Simple Network Time Protocol (RFC 1769)
SRS	System.Rack.Slot addressing of a module
SW	Software
TMO	TiMeOut
TMR	Triple Module Redundancy
W	Write
r_P	Peak value of a total AC component
Watchdog (WD)	Time monitoring for modules or programs. If the watchdog time is exceeded, the module or program enters the ERROR STOP state.
WDT	WatchDog Time

Index of Figures

Figure 1:	Sample Type Label	11
Figure 2:	Block Diagram	12
Figure 3:	Mechanical Structure	16
Figure 4:	Front View with LEDs and Mode Switch	17
Figure 5:	X-CB 001 01 Connector Board	26
Figure 6:	Inserting the Connector Board	29
Figure 7:	Securing the Connector Board with Captive Screws	30
Figure 8:	Mounting and Removing a Module	32
Figure 9:	Four Redundant Processor Modules in Rack 0	47
Figure 10:	Four Redundant Processor Modules Installed in Rack 0 and Rack 1	48

Index of Tables

Table 1:	Additional Relevant Manuals	5
Table 2:	Environmental Requirements	8
Table 3:	Specifications for the Ethernet Interfaces	15
Table 4:	Ports in Use	16
Table 5:	Blinking Frequencies of LEDs	18
Table 6:	Module Status Indicators	18
Table 7:	Redundancy Indicators	19
Table 8:	System Bus Indicators	19
Table 9:	Maintenance Indicators	20
Table 10:	Fault Indicators	20
Table 11:	Ethernet Indicators	21
Table 12:	Overview of the Mode Switch Positions	23
Table 13:	Supply Voltage Status	23
Table 14:	Temperature Status	23
Table 15:	Product Data	25
Table 16:	Pin Assignment of X-CB 001 01	26
Table 17:	Slot Positions Recommended for Processor Modules	28
Table 18:	Configuration Parameters	34
Table 19:	Routing Parameters	35
Table 20:	Ethernet Switch Parameters	35
Table 21:	Values for LLDP	36
Table 22:	Parameters for Boolean Events	38
Table 23:	Parameters for Scalar Events	40

Index

block diagram 12
CPU cycle 24
diagnosis 42
  Ethernet indicators 21
  fault indicators 20
  maintenance indicators 20
  redundancy indicators 19
  system bus indicators 19
Ethernet 15
event
  alarm 13
  definition 37
  recording 15
light emitting diode, LED 18
mode schwitch
  run 22
mode switch 21
  init 21
  stop 22
module status indicators 18
operating temperature 23
safety function 10
slots
  permitted 28
specifications 25
supply voltage 23
watchdog 13

HI 801 009 E
© 2011 HIMA Paul Hildebrandt GmbH + Co KG
HIMax and SILworX are registered trademark of:
HIMA Paul Hildebrandt GmbH + Co KG

Albert-Bassermann-Str. 28
68782 Brühl, Germany
Phone +49 6202 709-0
Fax +49 6202 709-107
HIMax-info@hima.com
www.hima.com

SAFETY
NONSTOP

8